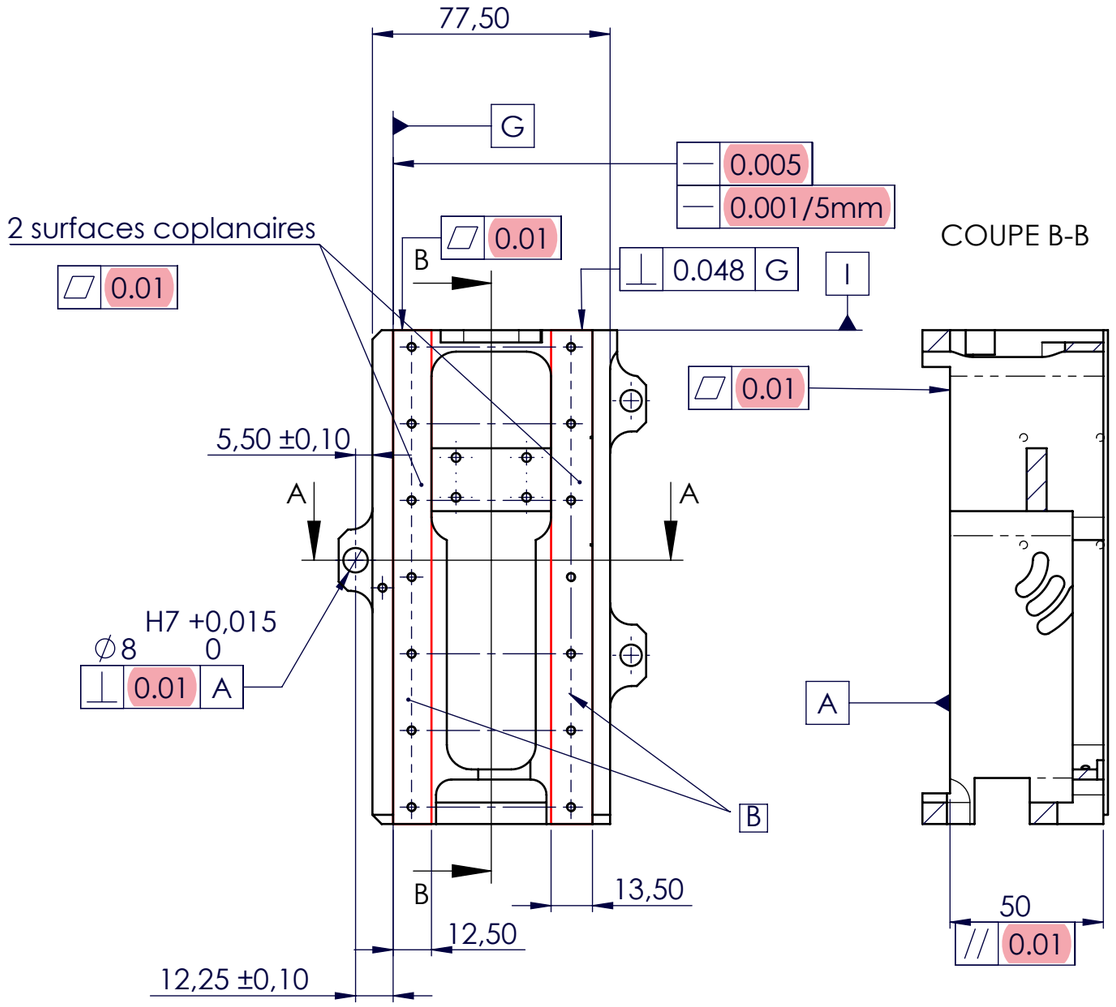


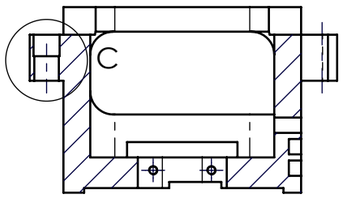


COUPE A-A

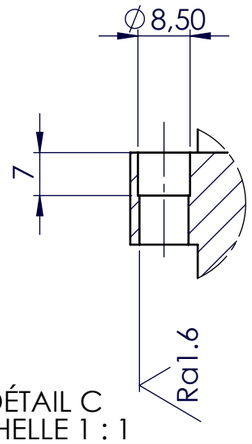


DÉTAIL C
ECHELLE 1 : 1

| Indice | Description de la modification | Date | Nom |
|---|---|---|---|

## Rapport de controle

Faire un rapport de controle
de la surface G
1 point tout le 5mm.

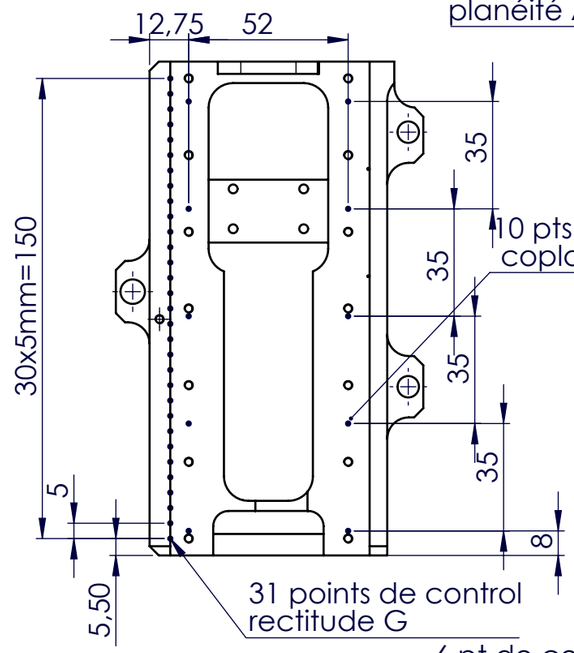


8 points de mesures
planéité A

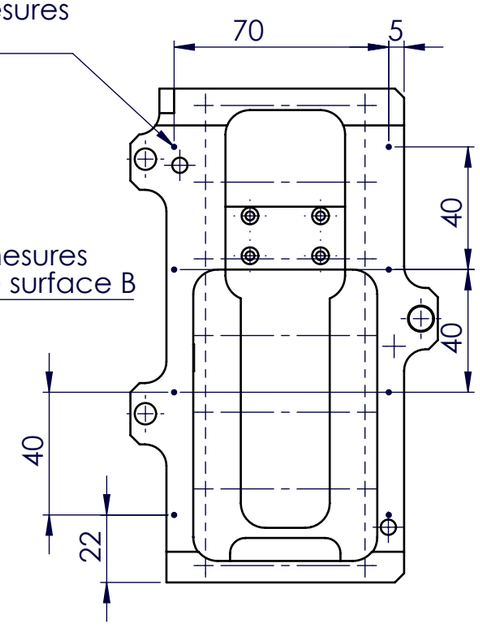


6 pt de controles
planéité I

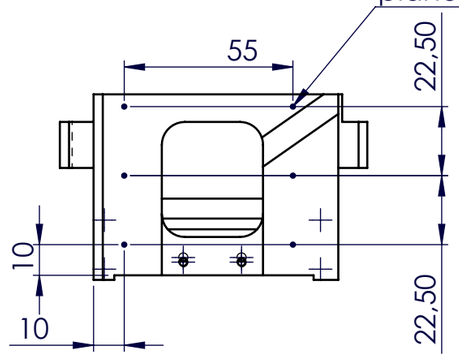


Mesurer le défaut de perpendicularité
entre G et I

| | | | | |
|---|---|---|---|---|
| rugosite generale: surface roughness: Ra 3,2 | tolerances generales: Tolerances: +/- 0.2 | Echelle/scale: 1:2 | unite/unit: mm | Projection européenne |
| matière/material: **AU4G (EN-AW 2017A)** | | Traitement/treatment: Anodisation incolore | | |
| XXX COTE MAJEURE A CONTROLER A LA RECEPTION | désignation BASE Z AXIS | numero/number: 55562 | Indice plan 01 | |
| | | Feuille/leaf: 1 / 2 | | |
| | Nom/Name: CC | Date: 13/01/23 | Format A3 | |
| | Poids/weight: 730.79 | D.A.O: Solidworks | cartouche: 04/11/2013 indice plan : 01 | |

This PDF document was edited with **Icecream PDF Editor**.
**Upgrade to PRO** to remove watermark.

| Indice | Description de la modification | Date | Nom |
|---|---|---|---|
| | | | |

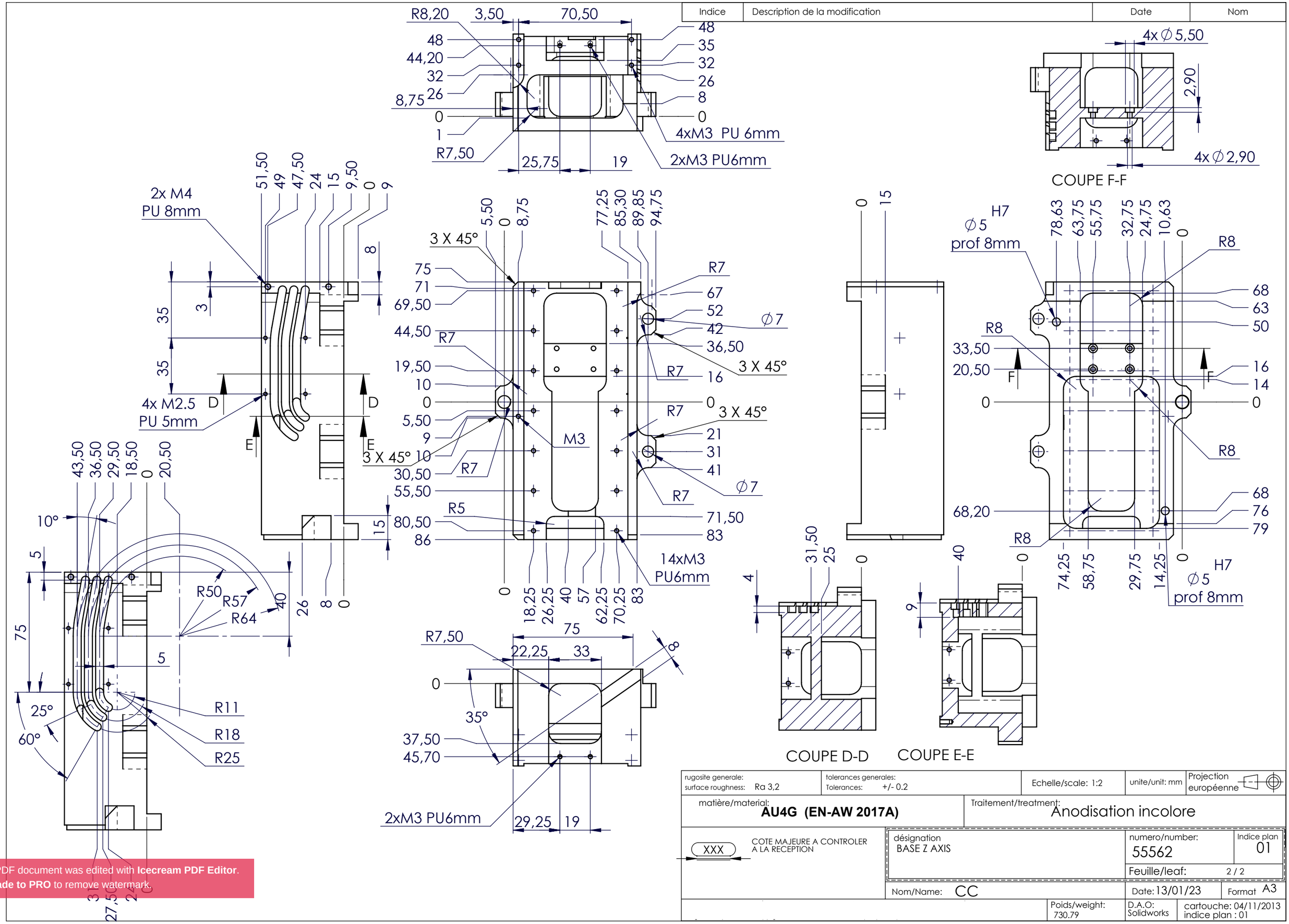


| | | | | |
|---|---|---|---|---|
| rugosite generale: surface roughness: Ra 3,2 | tolerances generales: Tolerances: +/- 0.2 | Echelle/scale: 1:2 | unite/unit: mm | Projection européenne |
| matière/material: **AU4G (EN-AW 2017A)** | | Traitement/treatment: Anodisation incolore | | |
| XXX COTE MAJEURE A CONTROLER A LA RECEPTION | désignation BASE Z AXIS | numero/number: 55562 | Indice plan 01 | |
| | | Feuille/leaf: 2 / 2 | | |
| | Nom/Name: CC | Date: 13/01/23 | Format A3 | |
| | Poids/weight: 730.79 | D.A.O: Solidworks | cartouche: 04/11/2013 indice plan : 01 | |

This PDF document was edited with **Icecream PDF Editor**.
**Upgrade to PRO** to remove watermark.