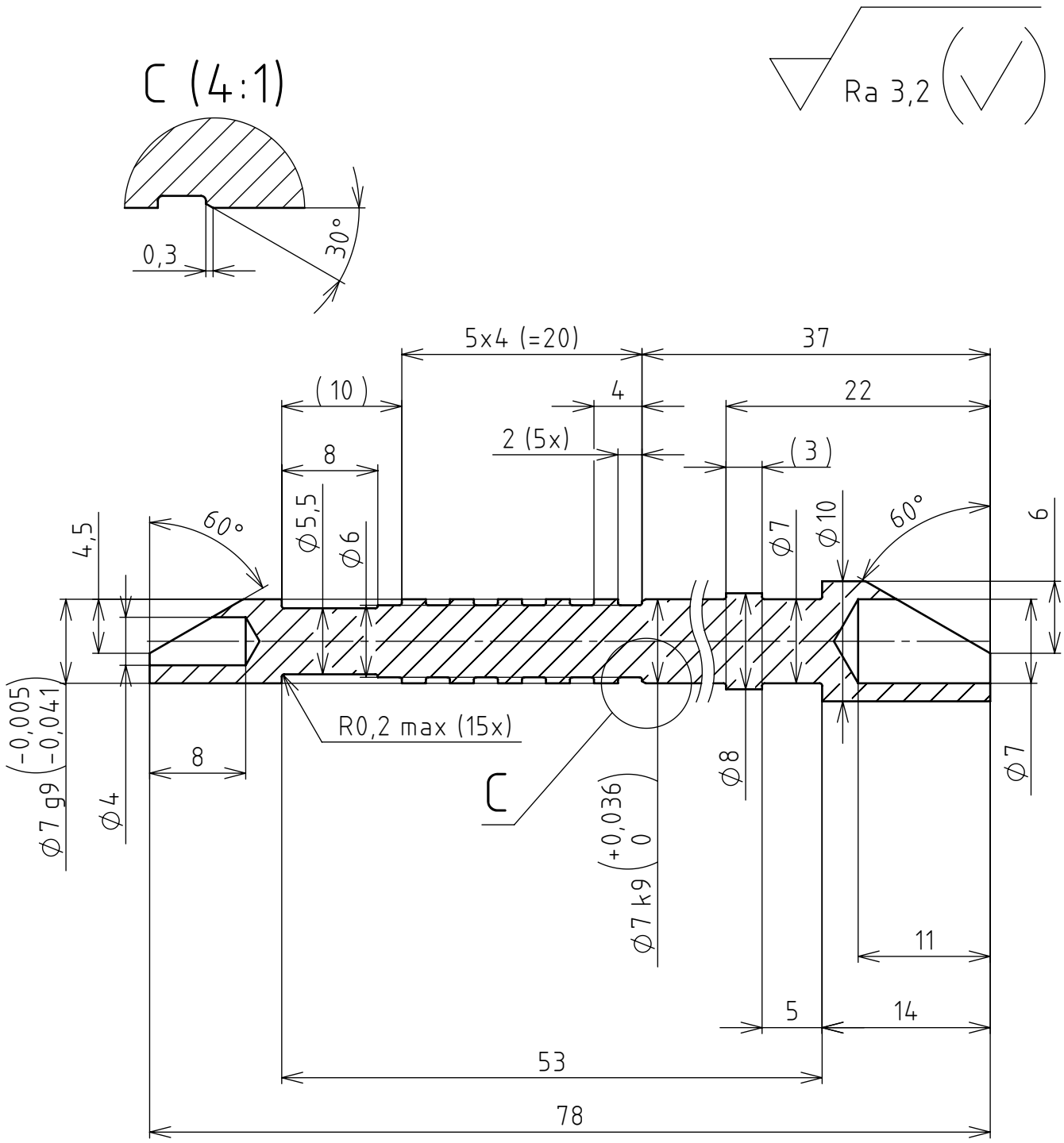

BURRS AND SHARP EDGES TO BE REMOVED

REV. INDEX	REQUEST No.	DESCRIPTION	REVISED BY	DATE

PRECISION	ISO 2768-mH	DRAWN BY	A. ANOKHINA	MATERIAL	2.0060 (Cu-ETP)
TOLERATION	ISO 8015	APPROVED BY	O. STRYBUL	WEIGHT (kg)	0.023
PROJECTION		DATE	07.10.19	FORMAT	A4
				SHEET	1 OF 1

MIRAI

TITLE	CONTACT	SCALE 2:1
DRAWING No.	M-2073-0021	REVISION 0
ORIGINAL No.		

CONFIDENTIAL DOCUMENTATION. ALL RIGHTS TO INFORMATION CONTAINED THEREIN RESERVED. UNAUTHORISED COPYING IS STRICTLY PROHIBITED.