SYSTEM DIAGONAL CONNECTION – 120x

M 1:2 DIN 1400.4/ AISI 316L

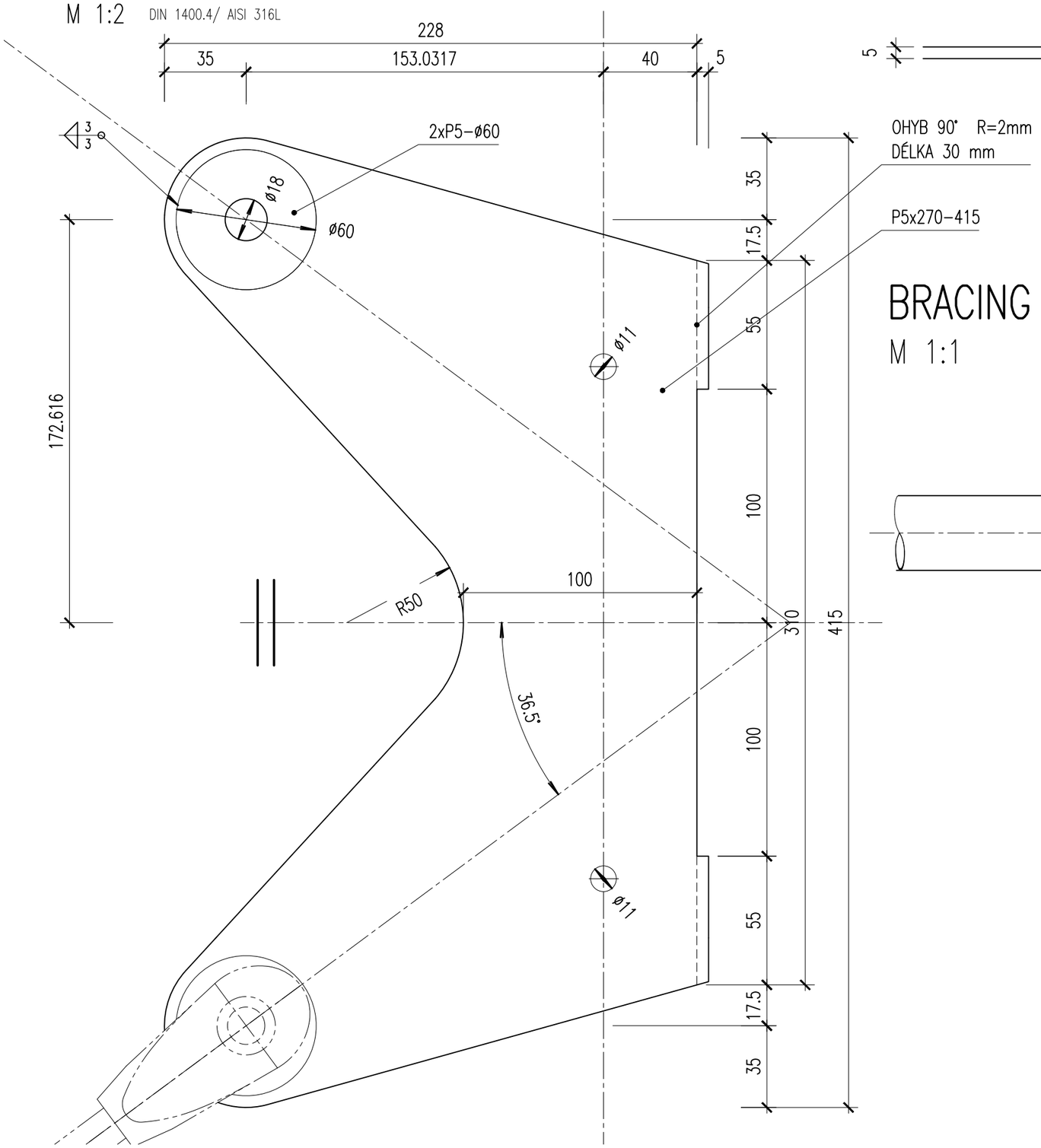

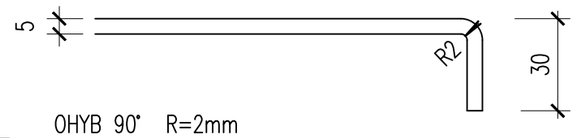

OHYB 90° R=2mm
DÉLKA 30 mm

P5x270–415

BRACING ROD– DETAIL

M 1:1

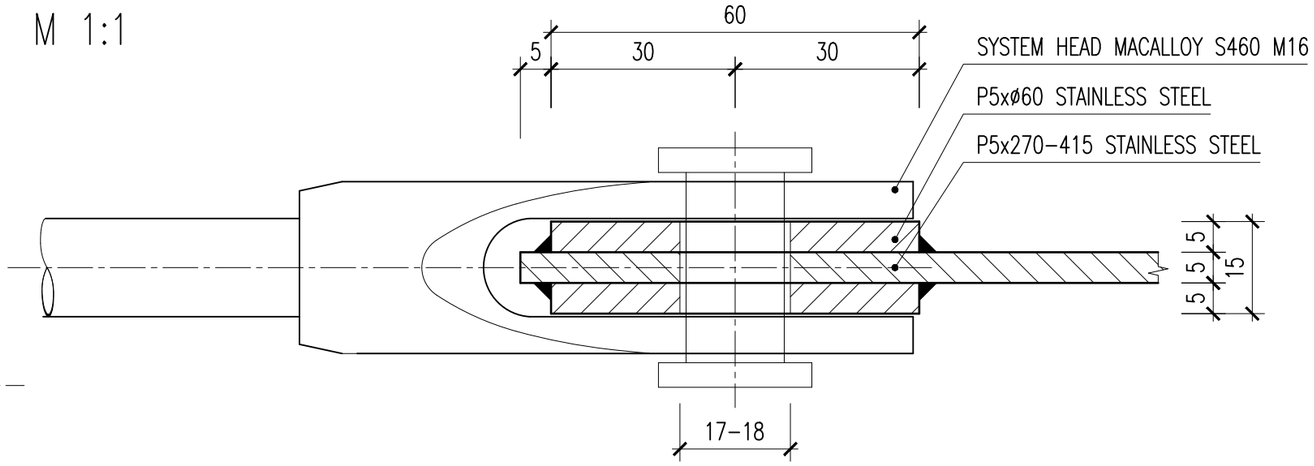

CONCEPT	CONSTRUCTION: CARPORT ROOF			DESIGN: PSi
	DWG NAME: STAINLESS STEEL 1.4404 OR AISI 316L	SCALE: 1:2	DATE: 231017	DWG NUMBER: VDSS6