Item	Description	Material	Dimensions	No.	Mass
01	HEB 360	S355	5260	2	1397
02	HEB 240	S355	5000	6	2496
03	Plate 10	S355	600x216	4	41
04	Plate 10	S355	315x288	2	15
05	Lifting Lug 15t		TWN0119 / 22-8	4	32
			Total Mass =		3981

NOTES:

-ALL DIMENSIONS IN mm UNLESS OTHERWISE SPECIFIED.

-ALL WEIGHTS IN kg UNLESS OTHERWISE SPECIFIED.

-ALL SHARP EDGES TO BE ROUNDED OFF WITH RADIUS 2mm.

-ALL WELDS, UNLESS OTHERWISE STATED, ARE FILLET WELDS 6mm.

-ALL WELDS ARE THROAT SIZE (a).

-DIMENSIONS BETWEEN BRACKETS ARE FOR INDICATION ONLY.

-ALL CUTTED EDGES TO BE GRINDED.

-WELD PREPARATION TO BE DETERMINED BY FABRICATOR.

-M.A.W. = Machining After Welding.

- MACHINING HOLES AFTER WELDING.

-FINISH, MACHINED HOLES AND SURFACES WITH: 3.2 .
UNLESS OTHERWISE SPECIFIED

-MACHINING ALLOWANCE TO BE DETERMINED BY FABRICATOR.

-MATERIALS ACCORDING TO MATERIAL SPECIFICATIONS ALE.

-SURFACE TREATMENT ACCORDING TO PAINTING SPECIFICATIONS ALE.

DIMENSION TOLERANCES ACCORDING TO: EN ISO 13920

-TOLERANCE CLASS "A" FOR LINEAR AND ANGULAR DIMENSIONS.

-TOLERANCE CLASS "E" FOR STRAIGHTNESS, FLATNESS AND PARALLELISM.

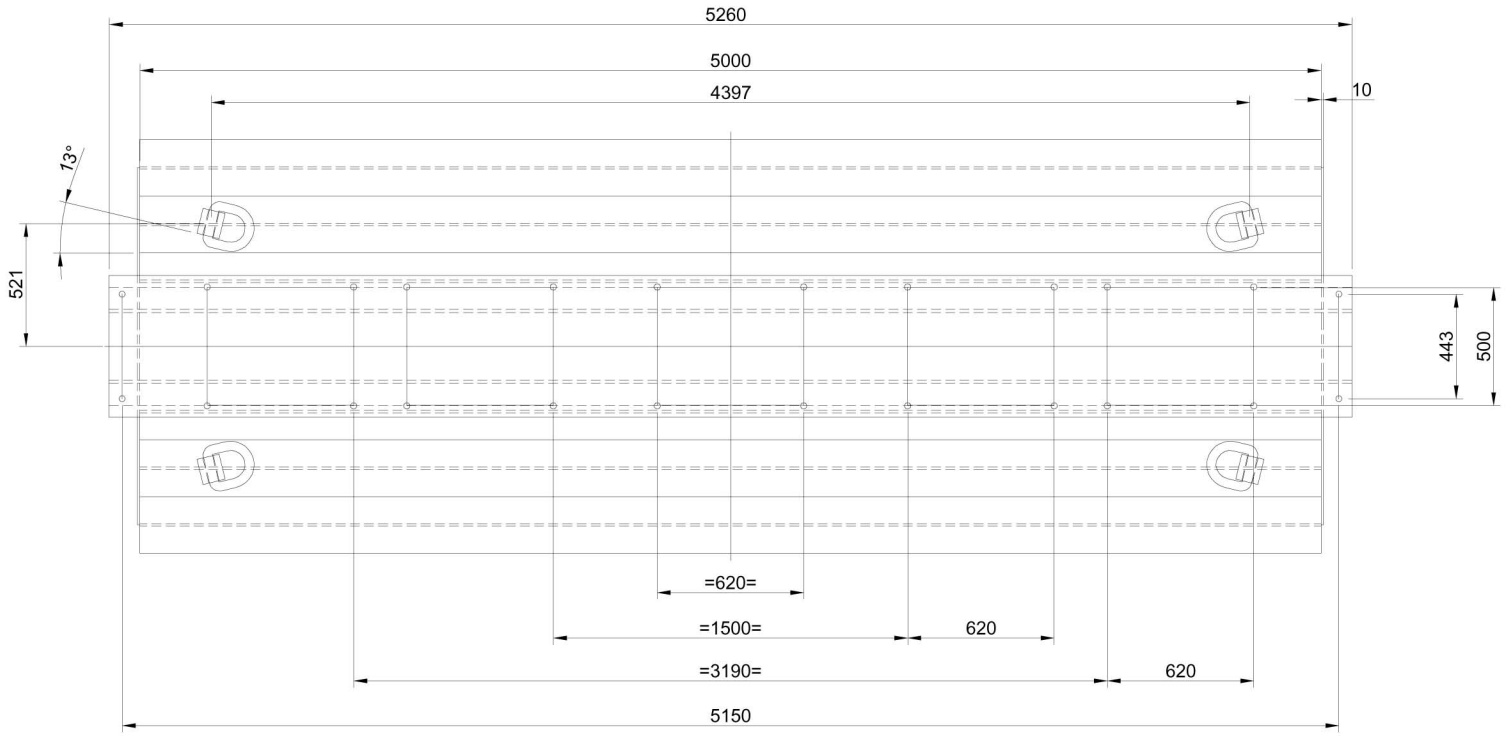

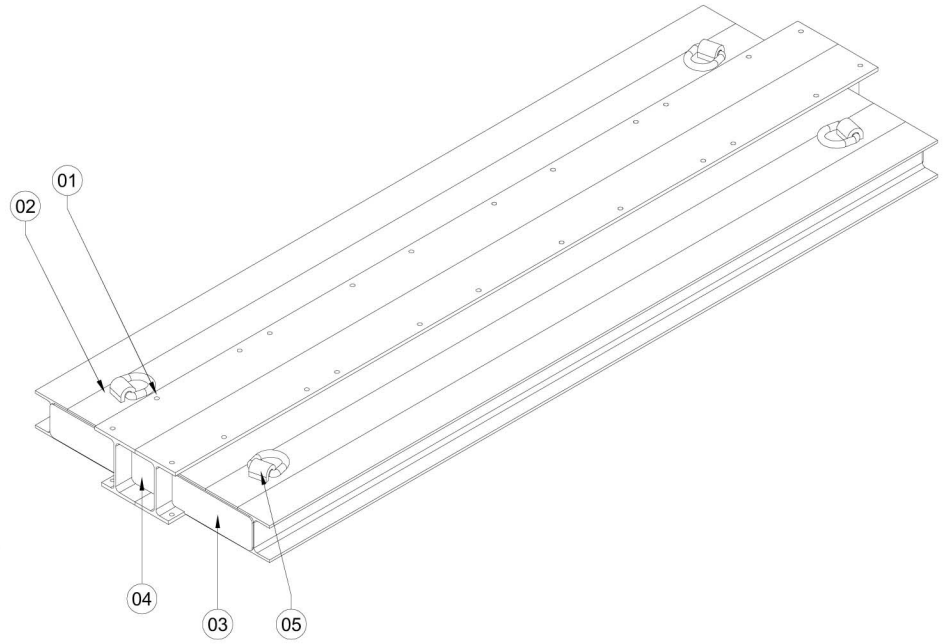

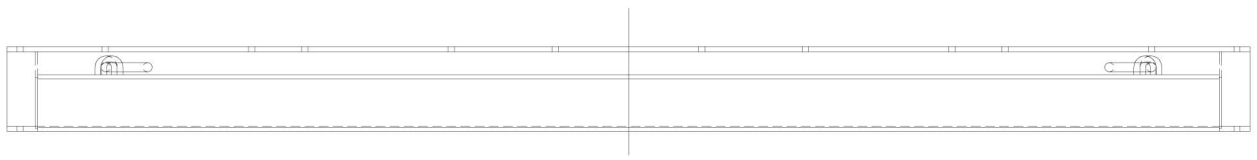

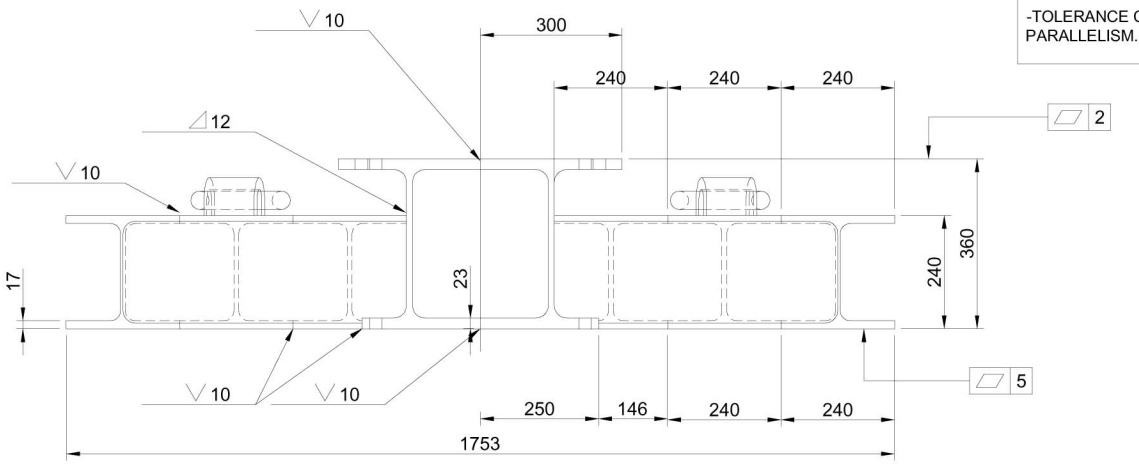

Front view
(scale 1:8)

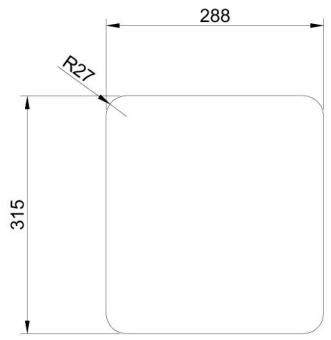

Pos 04
(scale 1:5)

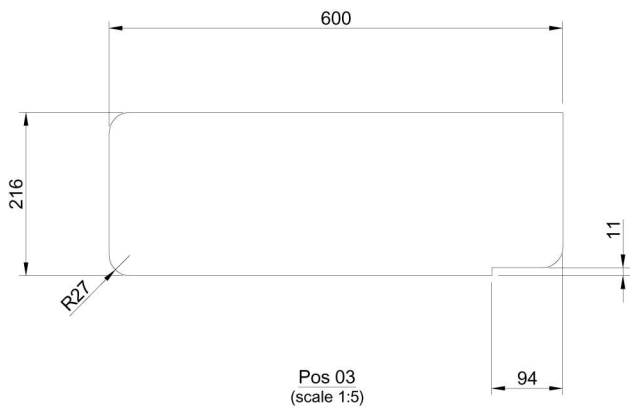

Pos 03
(scale 1:5)

Rev.	Date	Drawn	Check	Description	QF19 (Issue
0	24-02-2017	JO	KV	First issue	

Project Title
Al.SK190 & AL.SK350

Drawing Title
Construction assembly
Loadspreading for build up

Date	Drawn	Checked	Scale (A1)	Sheet
24-02-2017	JO	KV	1:16	1 of 1

Project No.	Drawing No.	Rev.
EQ	SK2-1-90-03-2	0

DO NOT SCALE | IF IN DOUBT ASK | The content of this drawing is confidential and must not be disclosed without the written permission of ALE. | File Location: N:\SK-2\1 Drawings\SK2-1-90 Auxillairy\SK2-1-90-03-2-0-IP.dwg