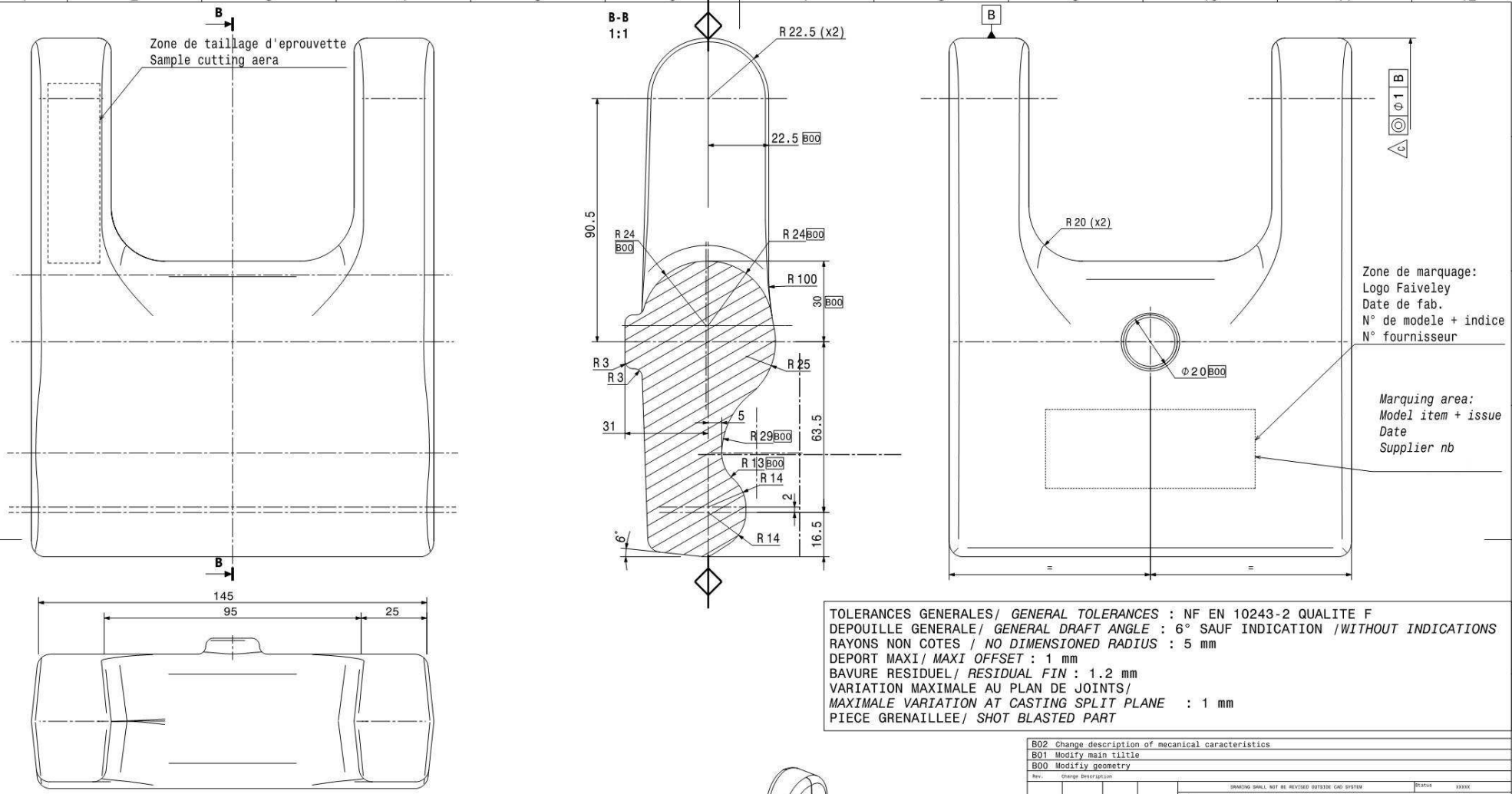

TOLERANCES GENERALES/ *GENERAL TOLERANCES* : NF EN 10243-2 QUALITE F
DEPOUILLE GENERALE/ *GENERAL DRAFT ANGLE* : 6° SAUF INDICATION /*WITHOUT INDICATIONS*
RAYONS NON COTES / *NO DIMENSIONED RADIUS* : 5 mm
DEPORT MAXI/ *MAXI OFFSET* : 1 mm
BAVURE RESIDUEL/ *RESIDUAL FIN* : 1.2 mm
VARIATION MAXIMALE AU PLAN DE JOINTS/
MAXIMALE VARIATION AT CASTING SPLIT PLANE : 1 mm
PIECE GRENAILLEE/ *SHOT BLASTED PART*

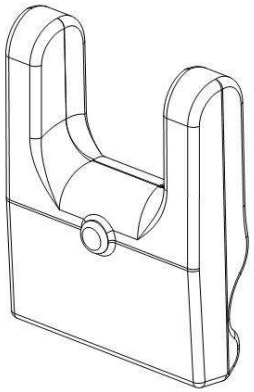

B02 CARACTERISTIQUES MECANIQUES SELON CDC3096
MECHANICAL CHARASTERISTICS ACCORDING TO CDC3096 C

Rev.	Change Description
B02	Change description of mecanical caracteristics
B01	Modify main tiltle
B00	Modifiy geometry

DRAWING SHALL NOT BE REVISED OUTSIDE CAD SYSTEM — Status XXXXX

Surface: (Ra --- Ra --- Ra---)

Hardening	Hardness	Depth	Finish
see note 1	/	/	/

Treatment	Raw part number	Model number
/	/	FT0011014-000

Tol.dim.	Deviation	Tol.dim.	Deviation

Application: ETR

General tolerances
General tolerances : ISO 2768-mH
Thread tolerances

Weight kg: 6,40 — BOM: N — Responsible site: AMIENS — Size: A2

Material: 42CrMo4 (42CD4) or equivalent according to NF EN 10250-3 (C)

Document Classification: MTC011
Fire and smoke class: /
Safety class: CF2
Wear piece: NO

Rev.	Change	Date	Name	Approved
B02	F2010/384	03/09/10	KM	DT
B01	.	09/07/2010	KM	DT
B00	FL2010/0043	28/06/10	KM	DT
A00	-	04/10	KM	DT

Based on: B123231
Customer name: /
Approved by Customer:
Replacement: / — Replaced: /
Customer reference number: /

Scale			Date	Name
1:1	Prepared		27/05/2010	MARIAGE K.
	Checked		08/07/2010	PAPIN D.
	Approved		09/07/2010	THOMAS D.

Main title, subtitle: LEVIER BRUT 45KN / RAW LEVER 45KN

Drawing identification number: FT0011014-R00 — Revision: B02 — Sheet: 1 / 1 — Sheets: 1

A2

The reproduction, distribution and utilization of this document as well as the communication of its contents to others without express authorization is prohibited. Offenders will be held liable for the payment of damages. All rights reserved in the event of the grant of a patent, utility model or design. © 2005

Toute communication ou reproduction de ce document, sous quelques forme que ce soit, et toute exploitation ou communication de son contenu sont interdites, sauf autorisation expresse. Tout manquement à cette règle est illicite et expose son auteur au versement de dommages et intérêts. Tous droits réservés pour le cas de la délivrance d'un brevet, d'un modèle d'utilité ou d'un modèle de présentation © 2005