STAMP IN 5MM CHARACTERS:
RIM SIZE 9.00 X 22.5
DWG NR. TL D 5010 275 0
IN 5 mm CHARACTERS

FOR HOLES SEE DETAIL"A"

16 HOLES ø17
EQUALLY SPACED

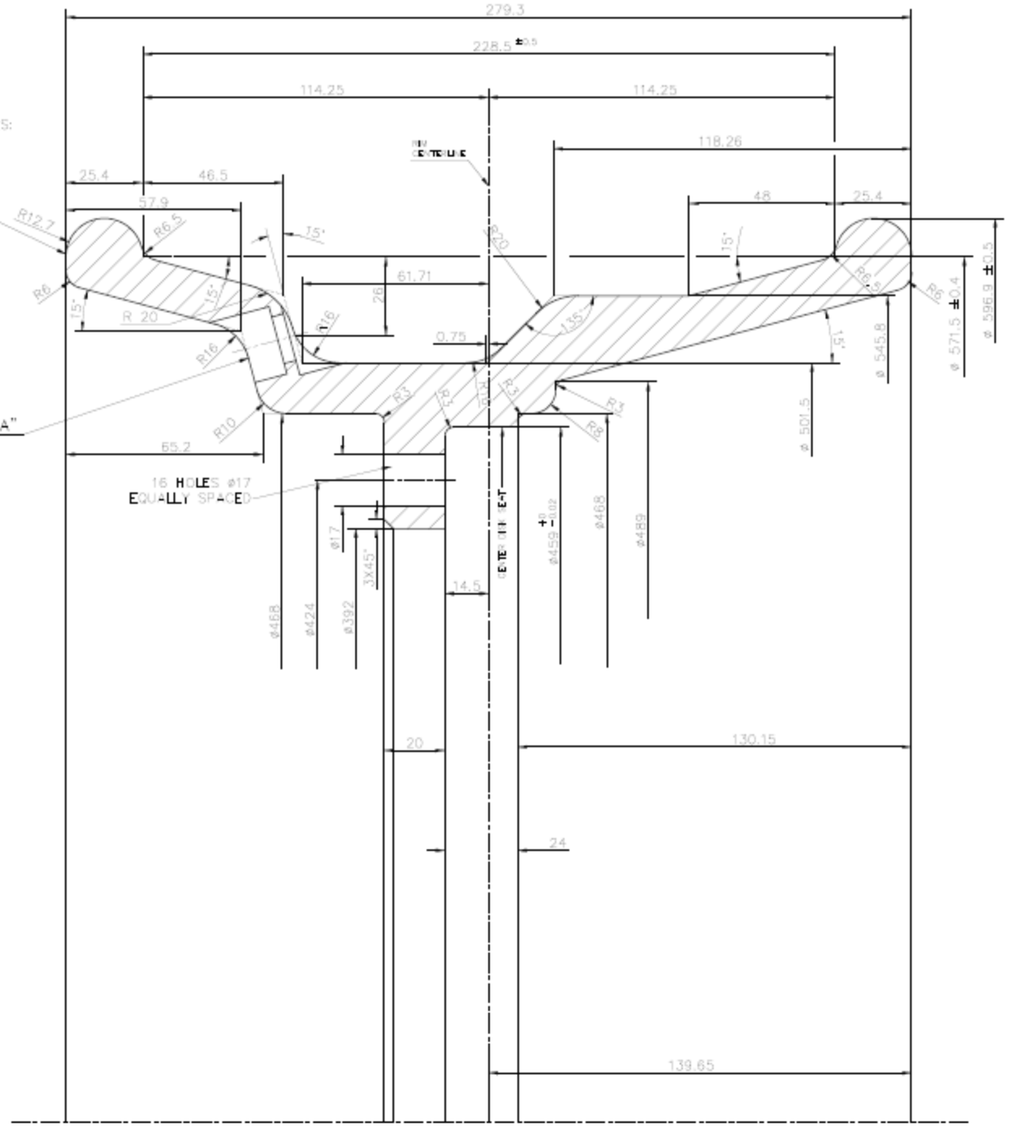

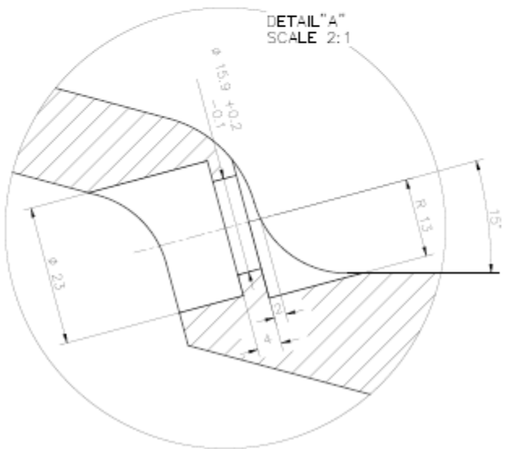

BREAK ALL SHARP CORNERS

6.3 (1.6 RIM INSIDE CONTOUR)