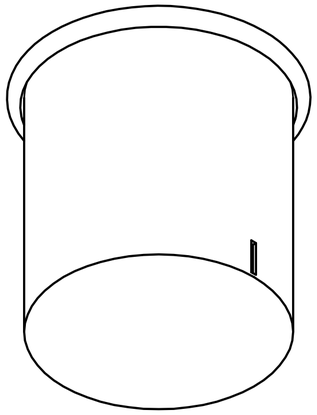

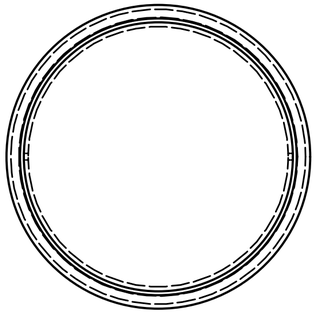

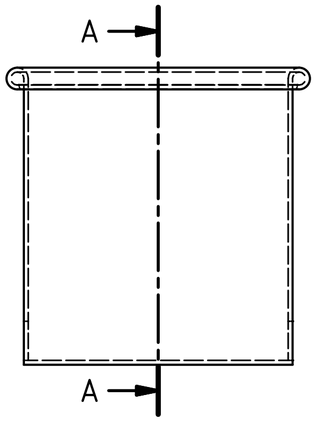

A-A (1 : 1)

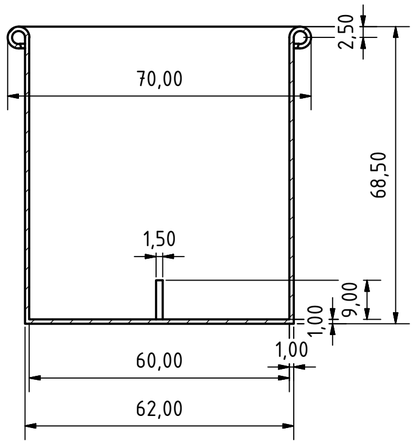

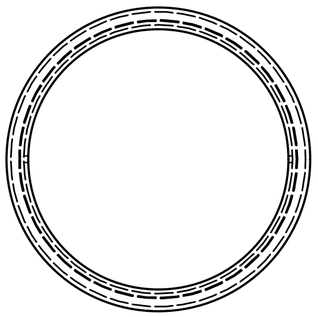

					Date	Name
				Drawn	26-2-2015	ivo
				Checked		
				Standard		
State	Changes	Date	Name			

cylinder64x67.5-kraal-sleuven

1

A2