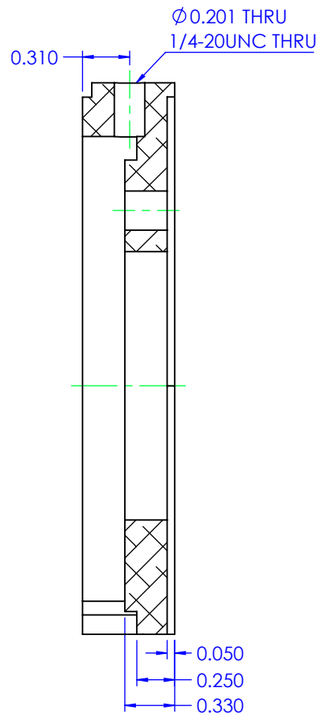

SECTION A-A

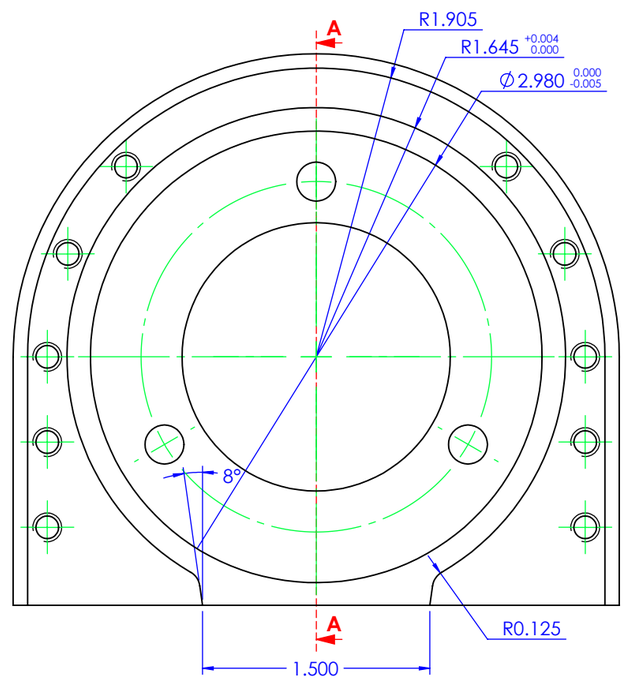

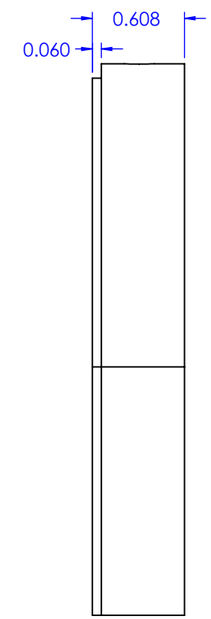

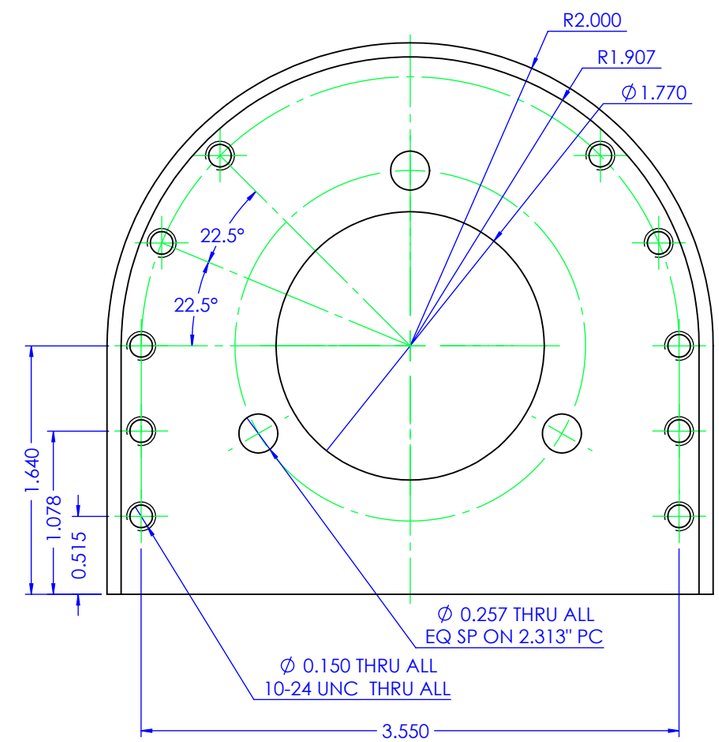

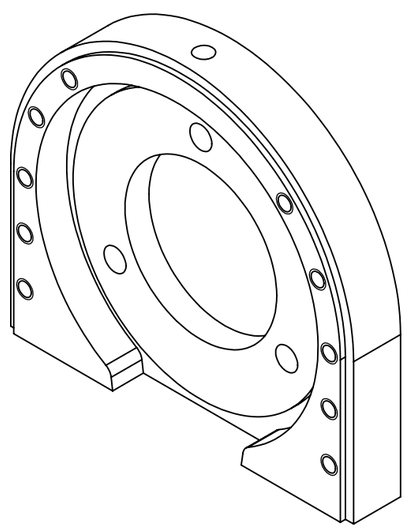

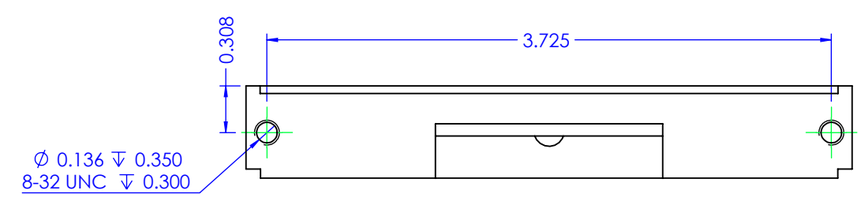

MATERIAL: AL 6061-T6	ASSEMBLY:	DRAWN	C. HURLBUT	29/JUN/15
		DESIGN		
		APPROVED		

UNLESS SPECIFIED:
ANGULAR: ± .25°
ONE PLACE DECIMAL ± .010
TWO PLACE DECIMAL ± .005
THREE PLACE DECIMAL ± .002
SURFACE FINISH: MAX 63 RMS
REMOVE BURRS, SHARP EDGES
CONCENTRICITY .005 T.I.R.

THE INFORMATION CONTAINED IN THIS DRAWING IS THE PROPRIETARY AND CONFIDENTIAL PROPERTY OF NXT Roasters Inc. ANY REPRODUCTION, DISCLOSURE OR USE FOR ANY PURPOSE OTHER THAN ORIGINALLY INTENDED IS PROHIBITED WITHOUT WRITTEN PERMISSION OF NXT Roasters Inc

DO NOT SCALE DRAWING

TITLE:
COFFEE GRINDER MODEL 050 FRONT GRINDER HOUSING

364596 ALBERTA LTD. Ph: (780) 447-5079

DWG. NO. 500-12 REV 1

SCALE: 1:1 | WEIGHT: 0.37 | SHEET 1 OF 1